Frigel
Intelligent Process Cooling

IndustrialChiller - 3HL

Air cooled water chiller

The 3HL industrial water chillers are air cooled and equipped with a double circuit and high efficiency double screw compressor with water working temperatures from 0 °C to + 25 °C. The 3HL is suitable for outdoor and indoor installation with appropriate fans. The standard ST configuration is designed for an ambient temperature up to about 45 °C; the HT version is also available for environments up to 55 °C, as well as using environmentally friendly R134a refrigerant. The use of quality components, careful design, rigid construction and testing procedures, guarantee maximum safety and reliability in all working conditions, preventing any risk of shutdown for industrial users. The standard range includes 8 models, from 300 to 1450 kW cooling capacity.

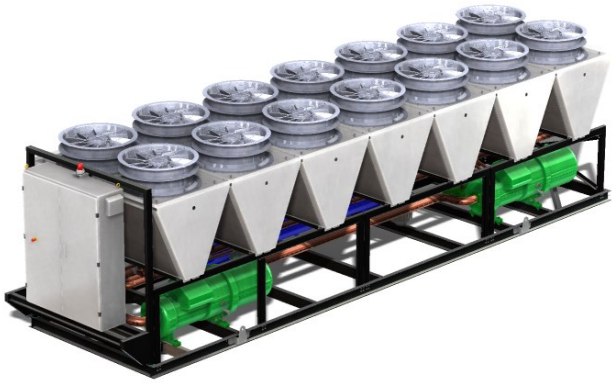

Advantages

- **Maximum efficiency and reliability**, both at full and partial load, using variable speed screw compressors (25-100%)
- **Wide range of ambient operating temperatures**, from –15 °C to + 55 °C, ensuring high performance in all weather conditions
- **Latest generation microprocessor control** with touch screen interface and ready to be connected to a "digital supervision system" (MiND)
- **Easy assistance** by recording operating status, working conditions and alarm history in the local memory.

Main features

- 3 fans configurations:
  - **TC:** fans with phase cut speed control
  - **EC:** brushless variable speed fans
  - **EH:** high pressure fans, suitable for ducting in-door installation
- High efficiency screw compressors
- Shell and tube evaporator
- Copper condenser with aluminium plates
- Microprocessor temperature controller with touch screen interface and serial connection to 3PR remote control panel
- Electronic thermostatic valves
- Hydraulic configuration: without pumps and tank (N).



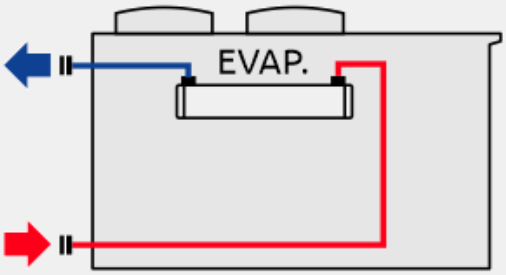

Options

- Air filters on condenser

Technical features:

Screw compressors:

- Semi-hermetic screw compressors, BITZER;
- electronic protection;
- integrated oil separator;
- differential pressure lubrication system;
- oil filter;
- oil level safety device;
- crankcase heater;
- refrigerant R134a;
- high and low pressure gauges and pressure switches;
- continuous proportional control (25/100%).

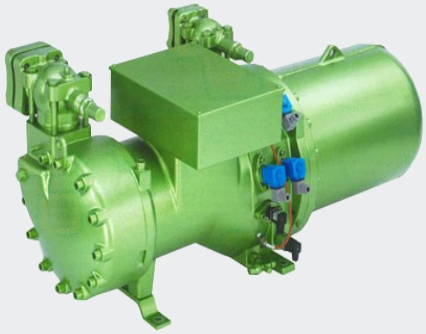

Condenser

- Higher efficiency and performances
  - mechanically expanded copper tubes in collar, spaced by aluminium fins with very low internal volume, "V-shape" arrangement;
  - special integrated sub-cooling circuit.



Axial fans

- **TC:** fans with phase cut speed control
  - TRIAC speed regulation;
  - fan speed continuous adjustment with consequent condenser cooling air flow regulation;
  - correct pressure in the refrigerant circuit guaranteed even at low winter temperatures.
- **EC:** brushless variable speed fans:
  - high efficiency, improved reliability and durability;
  - integrated electronics;
  - 100% adjustable speed;
  - consumption reduced by more than 30%;
  - low noise emissions (less than 57dB(A));
  - complies with the strictest EMC regulations.
- **EH:** high head EC fans
  - suitable for ducting on indoor installations (heat recovery) ;
  - for ambient temperatures greater than –15 °C.

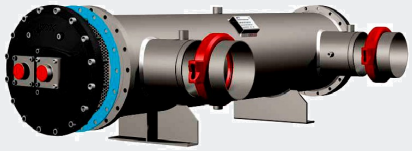



Shell and tube evaporator

- Optimised for use with R134a refrigerant;
- copper tubes with high exchange surface area
- thermal insulation;
- water differential pressure switch;
- water circuit drain;
- air vent valves and hydraulic connections conveyed to the outside with VICTAULIC elastic joint or flanged adapter.



Technical data

50Hz

Air cooled IndustrialChiller - 3HL										
Model			300	400	500	650	800	950	1150	1450
Power supply voltage and frequency			400V±10%/3/50Hz							
Cooling capacity (ST)	15°C/25°C (*)	kW	NA	NA	504	640	804	955	1115	1450
	10°C/35°C	kW	NA	NA	382	484	608	722	846	1106
Cooling capacity (HT)	15°C/25°C (*)	kW	264	366	407	538	668	842	980	1152
	10°C/35°C	kW	199	271	305	406	505	634	875	872
Compressor	Type		Screw							
	N°		2							
	Totally installed (ST)	Hp	NA	NA	90	110	140	160	180	240
	Totally installed (HT)	Hp	60	80	90	110	140	180	210	240
	Power (ST)	kW	ND	ND	122,4	147,3	189,0	218,3	244,1	322,9
	Power (HT)	kW	57,5	74,4	88,3	116,1	141,2	183,6	209,7	233,9
Fans (**)	Quantity (ST)	N°/kW	NA	NA	6 x 1,9	8 x 1,9	10 x 1,9	12 x 1,9	14 x 1,9	18 x 1,9
	Quantity (HT)	N°/kW	4 x 1,9	6 x 1,9	6 x 1,9	8 x 1,9	10 x 1,9	12 x 1,9	14 x 1,9	18 x 1,9
	Air flow (ST)	(m^3/sec)	ND	ND	35	47	58	70	82	105
	Air flow (HT)	(m^3/sec)	23	35	35	47	58	70	82	105
Evaporator	Type		Shell and tube							
	nom (ST)	m³/h	NA	NA	66	83	105	124	146	190
	nom (HT)	m³/h	34	47	52	70	87	109	127	150
	ΔP (ST)	bar	ND	ND	0,7	0,7	0,6	0,7	0,7	1,1
	ΔP (HT)	bar	0,3	0,3	0,4	0,5	0,4	0,5	0,5	0,7
Process water connections	Type		VICTAULIC							
	In/Out (ST)		NA	NA	DN150 5"	DN150 6"	DN150 6"	DN150 6"	DN150 6"	DN150 6"
	In/Out (HT)		DN125 5"	DN150 6"	DN150 6"	DN150 6"	DN150 6"	DN150 6"	DN150 6"	DN150 6"
Sound level	(ST)	dB(A) 10 m	NA	NA	64,2	68,6	68,1	68,0	68,1	69,8
	(HT)	dB(A) 10 m	63,3	64,1	64,2	68,6	68,1	68,0	68,1	69,8
Net weight	(ST)	kg	ND	ND	3860	5440	5950	7540	8080	9950
	(HT)	kg	2720	3850	3870	4400	5910	7460	8110	9180

60Hz

Air cooled IndustrialChiller - 3HL										
Model			300	400	500	650	800	950	1150	1450
Power supply voltage and frequency			460V±10%/3/60Hz							
Cooling capacity (ST)	15°C/25°C (*)	kW	NA	NA	474	622	779	970	1143	1364
	10°C/35°C	kW	NA	NA	353	471	588	733	865	1033
Cooling capacity (HT)	15°C/25°C (*)	kW	256	378	425	501	654	805	1009	1196
	10°C/35°C	kW	193	280	315	375	493	609	761	904
Compressor	Type		Screw							
	N°		2							
	Totally installed (ST)	Hp	NA	NA	70	90	110	140	160	180
	Totally installed (HT)	Hp	50	70	80	90	110	140	180	210
	Power (ST)	kW	NA	NA	112,0	144,1	176,3	228,4	265,6	290,4
	Power (HT)	kW	55,5	80,7	93,1	104,4	139,2	170,7	223,2	249,7
Fans (**)	Quantity (ST)	N°/kW	NA	NA	6 x 1,9	8 x 1,9	10 x 1,9	12 x 1,9	14 x 1,9	18 x 1,9
	Quantity (HT)	N°/kW	4 x 1,9	6 x 1,9	6 x 1,9	8 x 1,9	10 x 1,9	12 x 1,9	14 x 1,9	18 x 1,9
	Air flow (ST)	(m^3/sec)	NA	NA	35	47	58	70	82	105
	Air flow (HT)	(m^3/sec)	45	35	35	47	58	70	82	105
Evaporator	Type		Fascio tubiero							
	nom (ST)	m³/h	NA	NA	61	81	101	126	149	178
	nom (HT)	m³/h	33	48	54	65	85	105	131	155
	ΔP (ST)	bar	NA	NA	0,6	0,6	0,5	0,7	0,7	1,0
	ΔP (HT)	bar	0,3	0,4	0,4	0,4	0,4	0,5	0,6	0,7
Process water connections	Type		VICTAULIC							
	In/Out (ST)		NA	NA	DN150 6"	DN150 6"	DN150 6"	DN150 6"	DN150 6"	DN200 8"
	In/Out (HT)		DN125 5"	DN150 6"	DN150 6"	DN150 6"	DN150 6"	DN150 6"	DN150 6"	DN150 6"
Sound level	(ST)	dB(A) 10 m	NA	NA	64,2	68,6	68,1	68,0	68,1	69,8
	(HT)	dB(A) 10 m	63,3	64,1	64,2	68,6	68,1	68,0	68,1	69,8
Net weight	(ST)	kg	NA	NA	3860	5440	5950	7540	8080	9950
	(HT)	kg	2720	3850	3870	4400	5910	7460	8110	9180

- (*) Nominal Cooling capacity (water temperature/ambient temperature°C)
- (**) EC fans in case of Ambient Temperature >-15°C / EH fans in case of Ambient Temperature >-15°C
- Flow rate and pressure drop at nominal cooling capacity 10 °C / 35 °C
- Available supply voltage: 400V±10%/3/50Hz; 460V±10%/3/60Hz; 380V±10%/3/60Hz
- On request: UL electrical panel for 60Hz versions
- Altitude limit: 2600 m a.s.l.
- Capacity with process water temperature DeltaT = 5°C
- Add glycol in case of low ambient 0°C - Add glycol in case of set point lower than +7°C
- Pumps rated up to 35% of Glycol
- Glycol percentage: 20% glycol in weight -> from 0°C to the minimum set point temperature / 25% glycol in weight -> from -5°C to 0°C
- In case of setpoint <+5°C, contact Frigel
- Not suitable for demi-water
- Max water working pressure: 6 bar

Dimensional technical data

Air cooled IndustrialChiller - 3HL									
Model		300	400	500	650	800	950	1150	1450
A	mm	2250	2250	2250	2250	2250	2250	2250	2250
B	mm	2910	4100	4100	5250	6420	7590	8760	11100
C (TC fans)	mm	2400	2400	2400	2400	2400	2400	2400	2400
C (EC fans)	mm	2435	2435	2435	2435	2435	2435	2435	2435
C (EH fans)	mm	2453	2453	2453	2453	2453	2453	2453	2453
Dimensions refer to units in basic configuration, without added options									

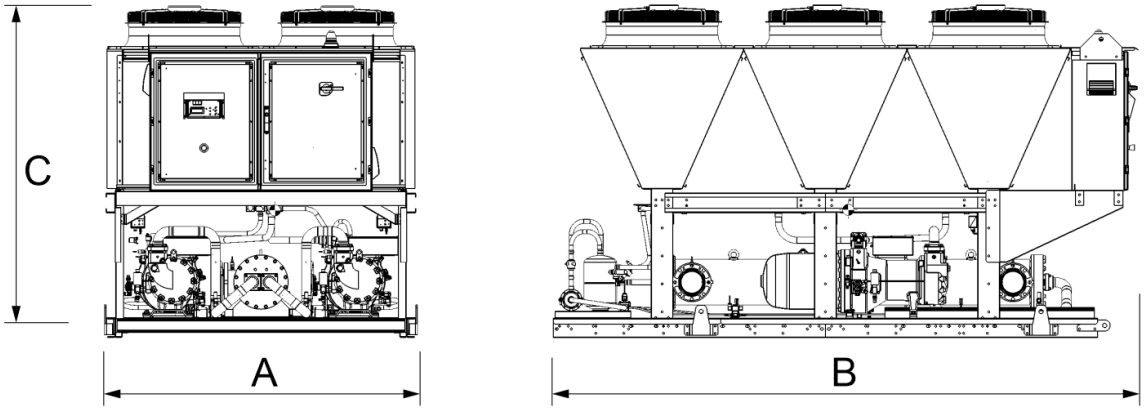

Order code

